FIRST ANGLE PROJECTION

(ALL DIMENSIONS ARE IN mm)

DRG. NO. 1-17052-40625

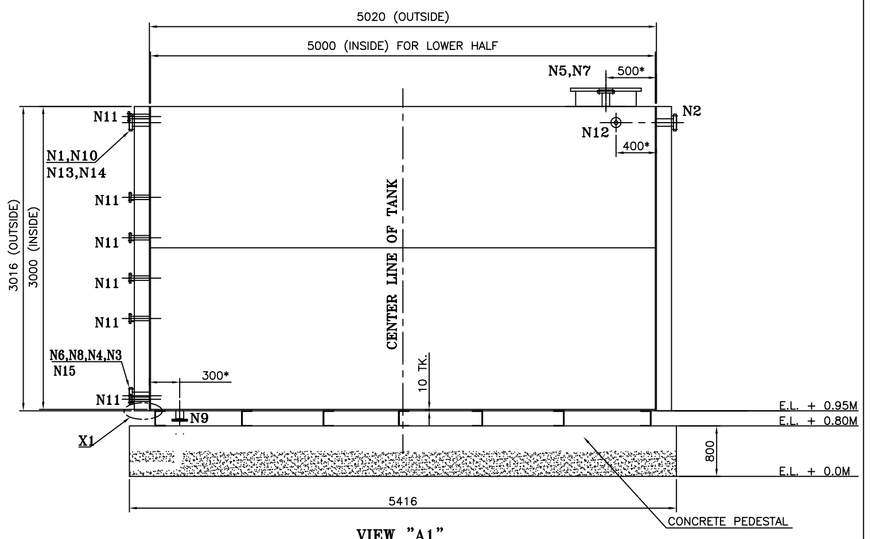

VIEW "A1"

* DIMENSION GIVEN FROM OUTSIDE

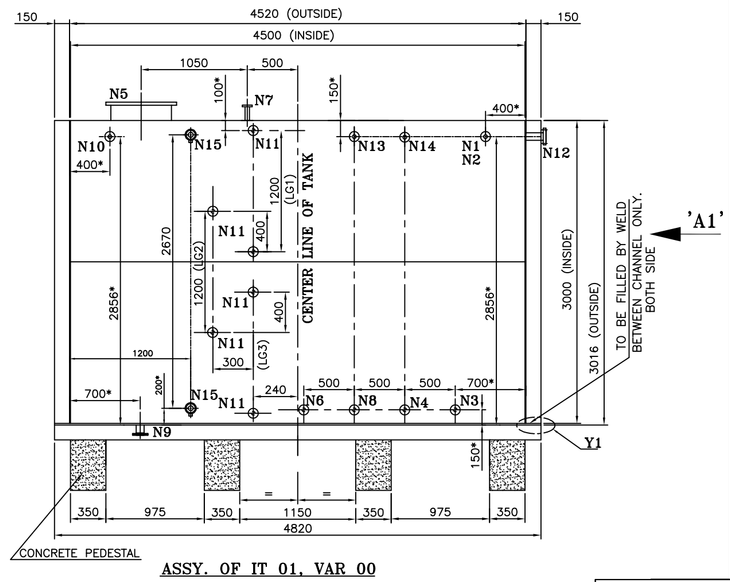

ASSY. OF IT 01, VAR 00

ELEVATION WITH FOUNDATION DETAILS

VIEW "A"

* DIMENSION GIVEN FROM OUTSIDE

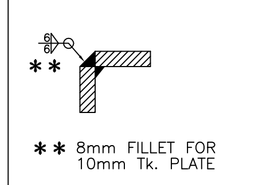

CORNER WELD DETAIL OF TANK

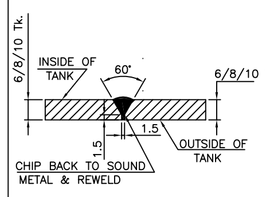

WELD DETAIL OF BUTT JOINT (OUTSIDE TO BE KEPT FLUSH

LIST OF CONNECTOINS WITH DETAILS

REF.	NOM.SIZE (NB)	FLAINGE						BOLT OR STUD		DESCRIPTION	NO. OFF	IS 6392 RATING N/mm²	REMARKS
		PCD.	DIA	RAISED FACE DIA.	TK.	RAISED FACE TK.	BOLT HOLE DIA.	NO. OFF	SIZE				
N1	80	150	190	120	18	3	18	4	M16	OIL INLET FROM MAIN OIL TANK	1	0.6	SORF
N2	80	150	190	120	18	3	18	4	M16	OIL INLET FROM DIRTY OIL TRANSFER	1	0.6	SORF
N3	80	150	190	120	18	3	18	4	M16	NORMAL OUTLET	1	0.6	SORF
N4	80	150	190	120	18	3	18	4	M16	OUTLET	1	0.6	SORF
N5	600	705	755	670	22	5	26	20	M24	MAN HOLE	1	0.6	SORF
N6	80	150	190	120	18	3	18	4	M16	SPARE (OUTLET)	1	0.6	SORF
N7	100	170	210	148	18	3	18	4	M16	VENT WITH FLAME ARRESTORS	1	0.6	SORF
N8	25	75	100	60	14	2	11	4	M8	SAMPLING	1	0.6	SORF
N9	80	150	190	120	18	3	18	4	M16	DRAIN	1	0.6	SORF
N10	80	150	190	120	18	3	18	4	M16	OVERFLOW	1	0.6	SORF
N11	25	75	100	60	14	2	11	4	M8	LEVEL GAUGE CONN.	6	0.6	SORF
N12	80	150	190	120	18	3	18	4	M16	RECIRCULATION	1	0.6	SORF
N13	80	150	190	120	18	3	18	4	M16	SPARE (INLET)	1	0.6	SORF
N14	80	150	190	120	18	3	18	4	M16	SPARE (INLET)	1	0.6	SORF
N15	RC1	–	–	–	–	–	–	–	–	FOR LEVEL SWITCH	2	–	PLUGGED

LIST OF FITTINGS

S. NO.	DESCRIPTION	QTY.	REMARKS
01	TRANSPARENT TYPE OIL LEVEL GAUGE (LG1,LG2 & LG3)	3 NOS.	SUPPLIED BY BHEL BHOPAL
02	VENT WITH FLAME ARRESTORS (100NB)	1 NO.	SUPPLIED BY BHEL BHOPAL
03	ROOT VALVE (25 NB) FLANGED FOR LEVEL GAUGE	6 NOS.	SUPPLIED BY BHEL BHOPAL
04	LADDER EXTERNAL AND INTERNAL	1+1 NO.	SUPPLIED BY BHEL BHOPAL
05	MAIN HOLE COVER WITH HANDLE	1 NO.	SUPPLIED BY BHEL BHOPAL
06	CAPACITANCE TYPE LEVEL SWITCH (RC1)	2 NOS.	SUPPLIED BY BHEL PEM

DESIGN DATA

CODE OF CONSTRUCTION	IS:804–1967 EDITION 2.2
DESIGN PRESSURE	ATMOSPHERIC
DESIGN TEMPERATURE	70 ° C
OPERATING PRESSURE	STATIC
OPERATING TEMPERATURE	AMBIENT
STORAGE MEDIUM	TURBINE LUBE OIL
CAPACITY	60 M^3
WEIGHT (EMPTY)	10.27 TONS
WEIGHT (FLOODED)	78.10 TONS
JOINT EFFICIENCY	0.7
QUANTITY	ONE(01) NO. TOTAL

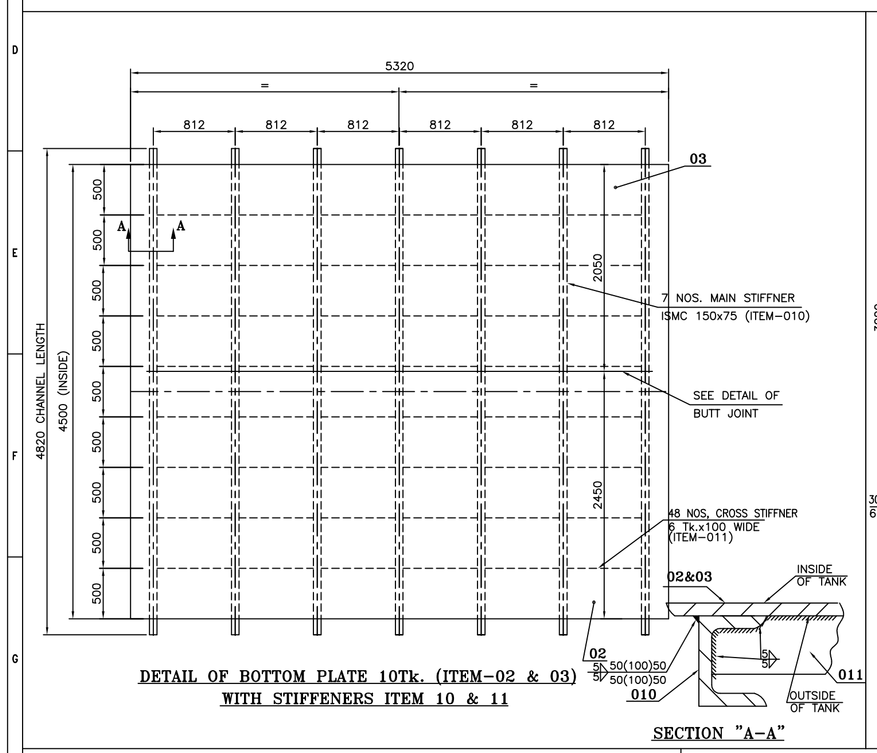

DETAIL OF BOTTOM PLATE 10Tk. (ITEM–02 & 03) WITH STIFFENERS ITEM 10 & 11

SECTION "A–A"

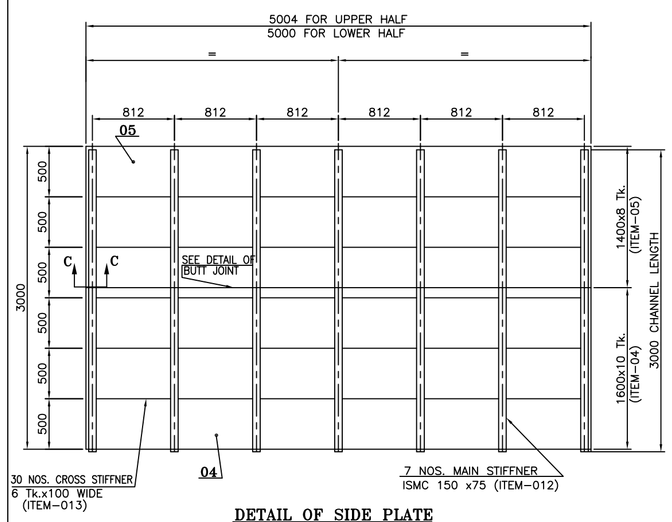

DETAIL OF SIDE PLATE WITH STIFFENERS

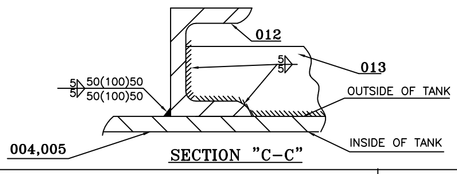

SECTION "C–C"

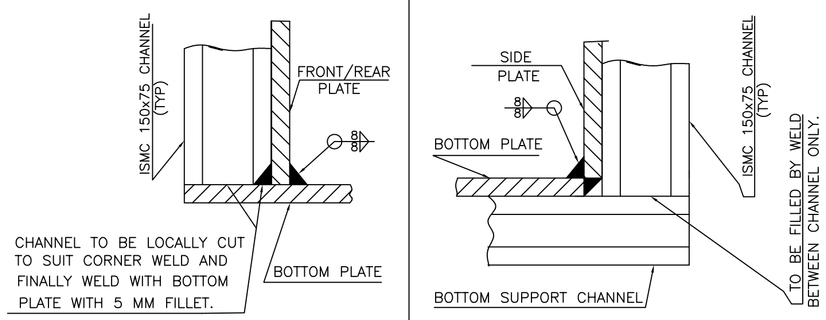

DETAIL – X1

DETAIL – Y1

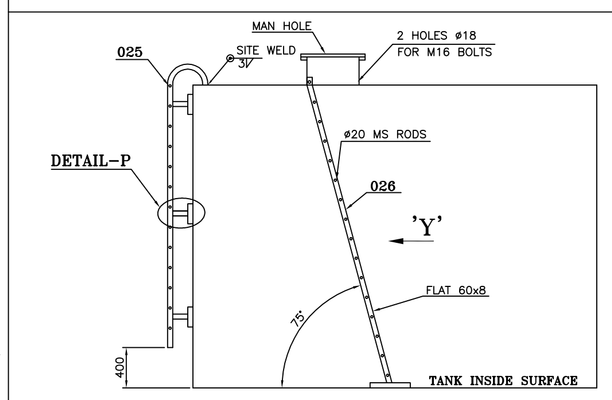

DETAIL OF INSIDE & OUTSIDE LADDERS

MATERIAL OF CONSTRUCTION OF MAJOR PARTS

DESCRIPTION	SPECIFICATION
TOP, BOTTOM & SIDE PLATE	IS 2062 Gr. A.
NOZZLE PIPE	SA 106 Gr. B.
STIFFENER, GUSSET, RIB STAYS, CHANNEL & ANGLE	IS 2062 Gr. A
BOLTS & NUTS	CL 4.6 & 4.0 OF IS–1367
ISOLATION GATE VALVE	CARBON STEEL

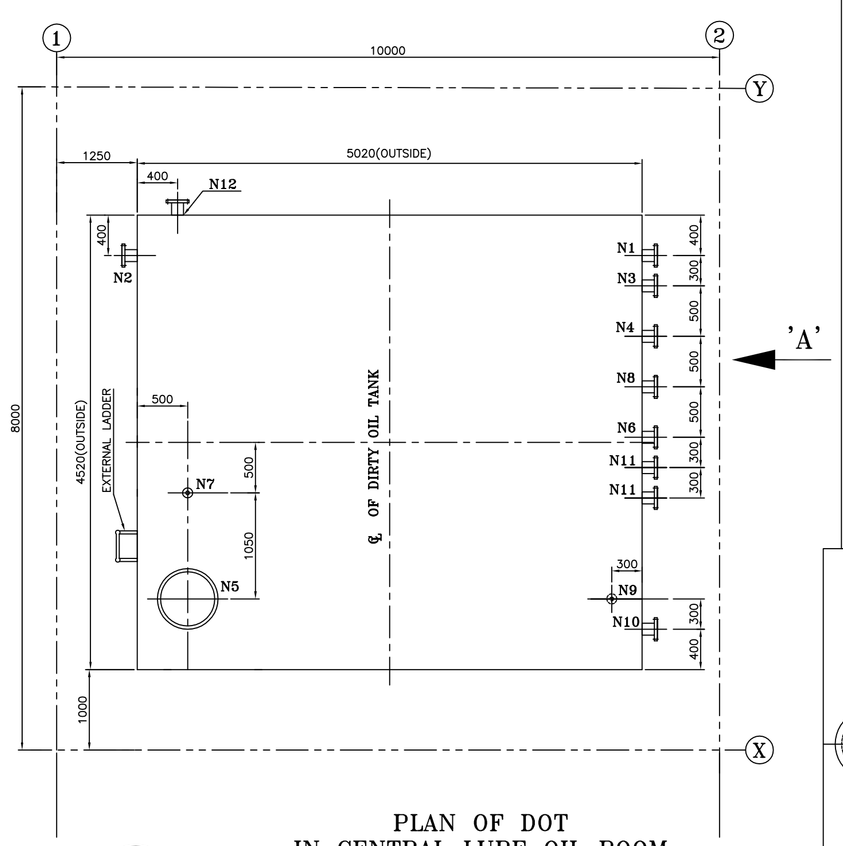

PLAN OF DOT IN CENTRAL LUBE OIL ROOM

NORTH

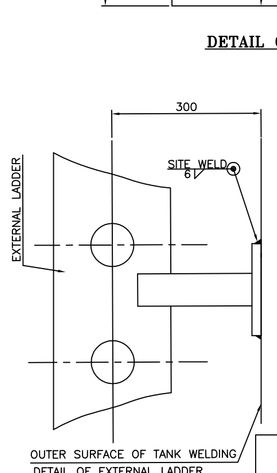

DETAIL–P

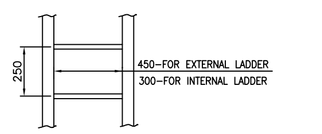

VIEW–Y

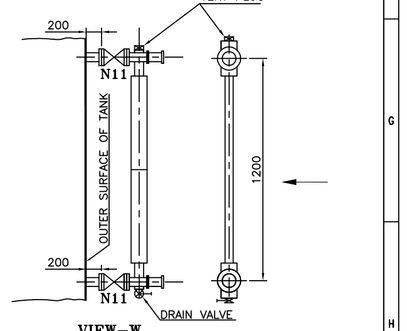

VIEW–W

ARRANGEMENT DETAILS OF OIL LEVEL GAUGE WITH TANK

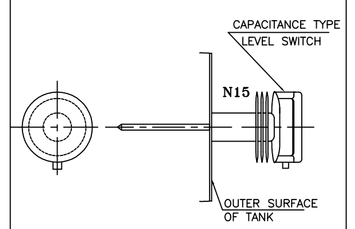

ARRANGEMENT DETAILS OF LEVEL SWITCH WITH TANK

NOTES:–

1. WELDING SHOULD BE CARRIED OUT AS PER CORP. STD. AA0622101
   GRADE –III, ALL LEAK PROOF WELDS TO BE 100% D.P. TESTED AS PER AA0850129.
   AND ALL OTHER WELDS TO BE 10% D.P. TESTED AS PER AA0850129.
2. ALL FILLET WELDS TO SIZE 5mm UNLESS SPECIFIED.
3. REMOVE BURRS & SHARP EDGES.
4. TANKS TO BE SHOT/SAND BLASTED AND PAINTING SHOULD BE DONE AS FOLLOWS [PAINTING TO BE DONE AFTER WATER FILL TEST].
   INSIDE :– TWO COATS OF DOUBLE BOILED LINSEED OIL.
   OUTSIDE :– TWO COATS OF ANTICORROSIVE RED OXIDE ZINC PHOSPHATE PRIMER TO AA56101 FOLLOWED BY ADEQUATE NO. OF COATS OF SYNTHETIC ENAMEL LIGHT GREY FINISH PAINT TO AA56126. COLOR : 631 OF IS–5. TOTAL DFT = 140 MICRONS (MINIMUM).
5. ALL COUNTER FLANGES WITH ASSOCIATED FASTNERS ARE IN BHEL BHOPAL'S SCOPE OF SUPPLY.
6. TANK SHOULD BE FILLED WITH WATER AND KEPT FOR 12 HOURS TO CHECK LEAK TIGHTNESS. TANK TO BE DRIED THROUGHLY AFTER WATER FILL TEST.
7. ALL NOZZLE CONNECTIONS TO BE SUITABLY BLANKED FOR TRANSPORTATION PURPOSE
8. ALL FITTING ARE TO BE SENT LOOSE TO SITE ALONG–WITH THE MAIN EQUIPMENT.
9. STIFFERNER TO BE LOCALLY CUT AND GROUND SMOOTH IN CASE FALL ON NOZZLE LOCATION.
10. WELDING OF STIFFENERS TO BE 100 MM SPACE WELD DONE ALTERNATIVELY ON BOTH SIDE.
11. ALL NOZZLE OPENINGS TO BE MADE AFTER WELDINGS AND BOX–UP OF TANK FOR CORRECT LOCATION.
12. ALL ELEVATIONS ARE WITH RESPECT TO TG HALL 0.0 M. WHICH REFERS TO RL 69.5 M.

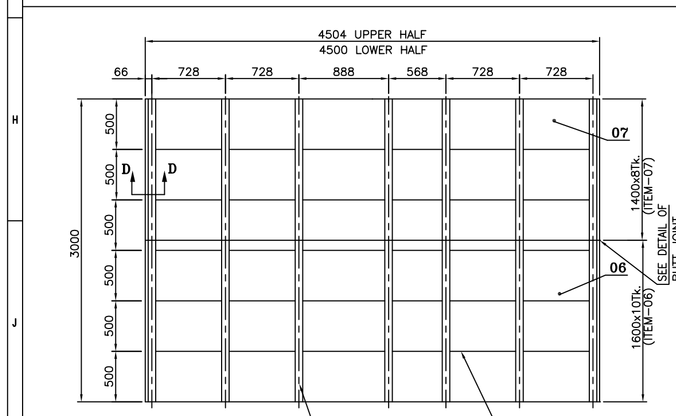

DETAIL OF FRONT / REAR PLATE WITH STIFFENERS

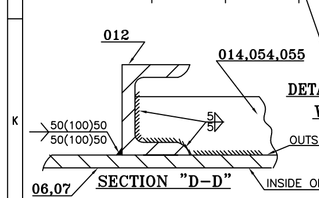

SECTION "D–D"

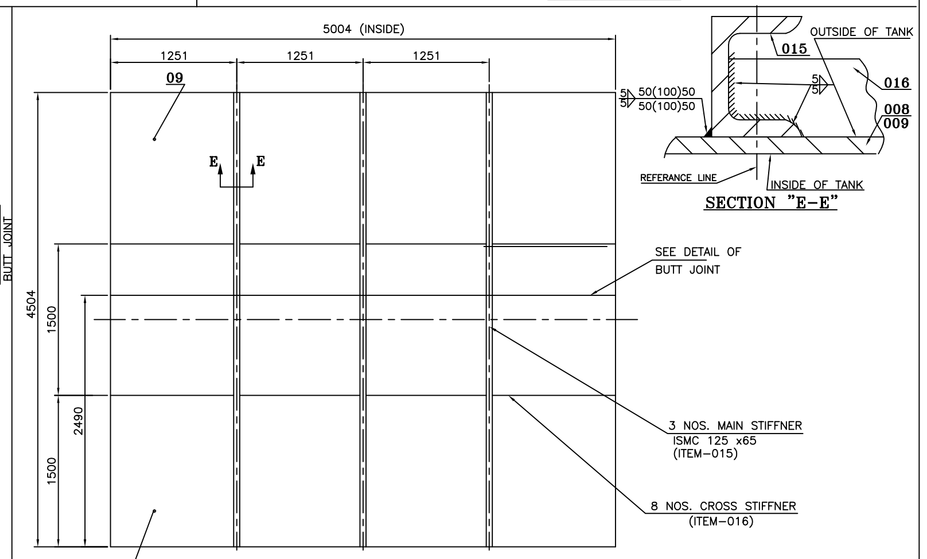

DETAIL OF ROOF PLATE (ITEM–08 & 09) WITH STIFFNERS ITEM 15 &16

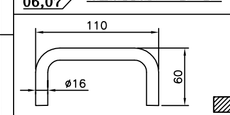

DETAIL OF ITEM–35

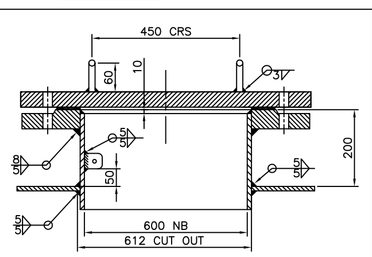

DETAIL OF MANHOLE WELDING ON TANK

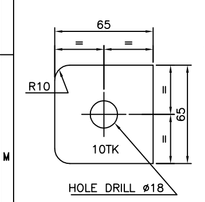

DETAIL OF ITEM–51

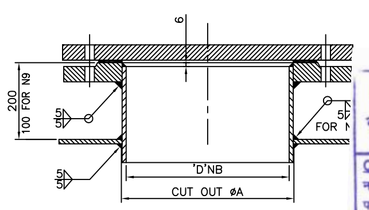

WELDING DETAIL OF FLANED CONNI WITH FLANGE / PLATE
(NOZZLE–N9 TO BE KEPT FLUSH WITH TANK IN

Category - I

अनुमोदित / APPROVED
WITHOUT PREJUDICE TO CONTRACTUAL OBLIGATIONS AND LIABILITY
Checked & Reviewed: नाम / Name : A. Kumar पदनाम / Designation : DE Sign : Date : 06.02.17
Verified (Design-in-Charge) नाम / Name : J.K. Singh पदनाम / Designation : AGM Sign : Date : 06.02.17
Power Plant & Energy Engineering
मेकॉन लिमिटेड / MECON LIMITED
राँची / Ranchi

BRANCH PIPE	
PIPE SIZE 'D'	øA
25 NB	ø36
80 NB	ø91
100 NB	ø116

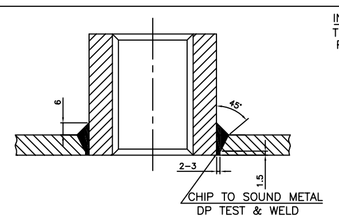

N15 WITH TANK PLATE

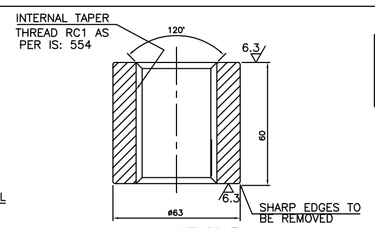

DETAIL OF N15

FOR BILL OF MATERIAL REFER DOC NO. 11705240625

REV.	DATE	ALTERED / CHECKED / APPROVED	REV.	DATE	ALTERED / CHECKED / APPROVED	REV.	DATE	ALTERED / CHECKED / APPROVED

ADDITIONAL INFORMATION

STATUS OF DRAWING –

DISTRIBUTION OF PRINTS
CDE – 1 HCM – 4
FBM – 4

उत्पाद का प्रकार या ग्राहक/परियोजना का नाम TYPE OF PRODUCT OR NAME OF CUSTOMER/PROJECT: ROURKELA PP–II EXPANSION PROJECT (1X250 MW)

OWNER: NTPCL — NTPC SAIL POWER COMPANY (P) LIMITED

CONSULTANT: मेकॉन लिमिटेड / MECON LIMITED

भारत हेवी इलेक्ट्रिकल्स लिमिटेड भोपाल / BHARAT HEAVY ELECTRICALS LTD. BHOPAL

बनाया DRN	RADHE	–SD/–	02.02.17
जाँचा CKD	ALPA	–SD/–	02.02.17
स्वीकृत APD	MLC	–SD/–	02.02.17

विभाग DEPT. CDE; जॉब, दस्ता अथवा श्रेणी UNIT/GROUP OR M; केंद्र CODE 411; AA0230208

अनुपात SCALE NTS; शीट SH.01; फ्रेम, कुर्सी या बेकेट REF. TO ASSY. DRG. NA; मात्रा QTY. ITEM NO.

शीर्षक/ TITLE: GENERAL ARRGT. & ASSY. OF DIRTY OIL TANK

ड्राइंग सं./DRAWING NO. 1–17052–40625; पुन./REV 00

पृष्ठ SH./SHT. No. 01; पृष्ठों की संख्या NO. OF SHT. 01

THE INFORMATION ON THIS DOCUMENT IS THE PROPERTY OF BHARAT HEAVY ELECTRICALS LIMITED
IT MUST NOT BE USED DIRECTLY OR INDIRECTLY IN ANY WAY DETRIMENTAL TO THE INTEREST OF THE COMPANY

INVENTORY NO. | SIGN. & DATE | REF. DRG. NO.